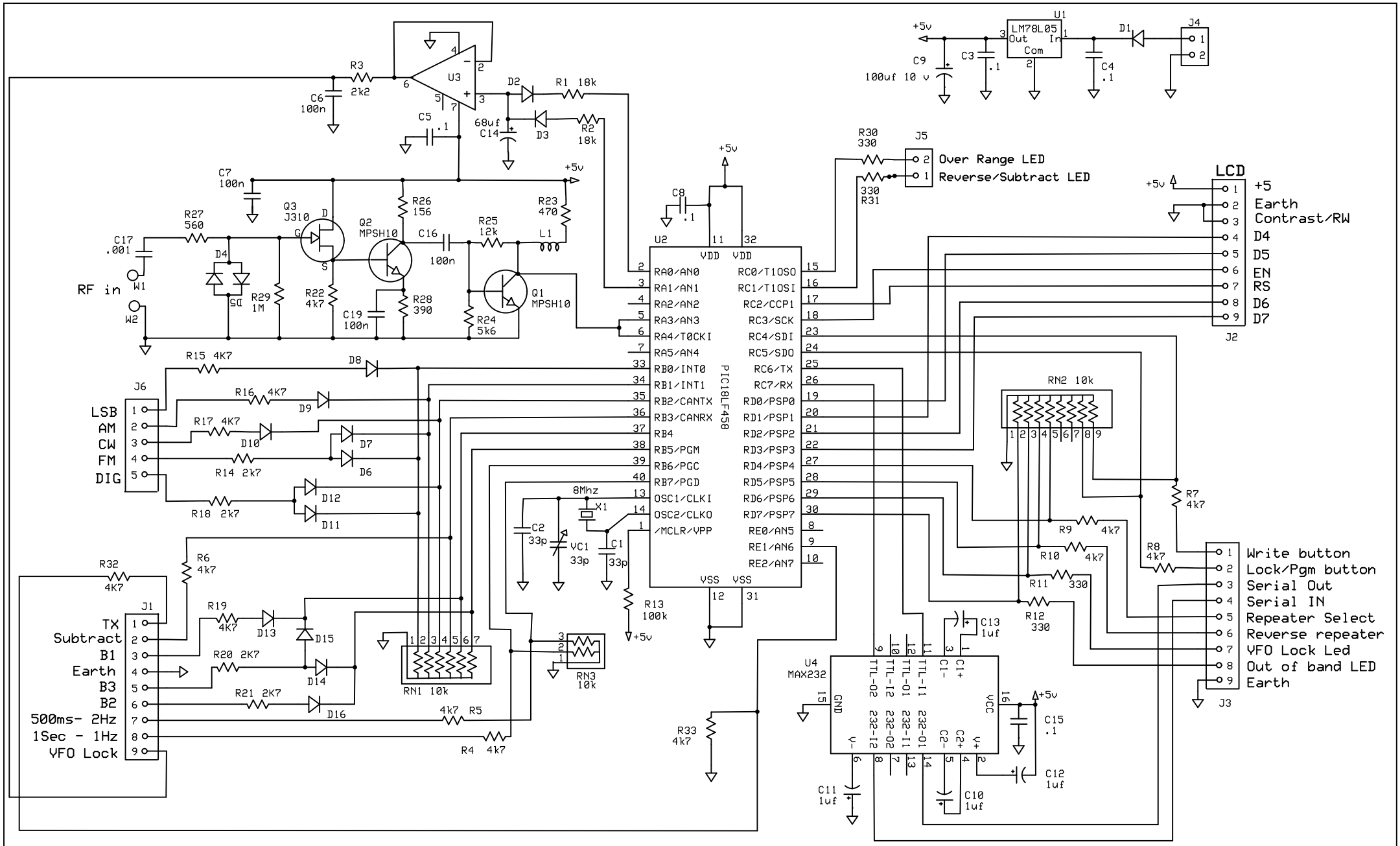

J1 Pin 8 and 9 are active LO. (If both off, Period is 100ms, 10HZ)

Rest of J1, J3 and J6 inputs are active HI

ZINSOFT YK4AMZ		
Frequency Display		
Mike Zingelmann	Rev 5.0 14/01/2008	Page 1 of 1