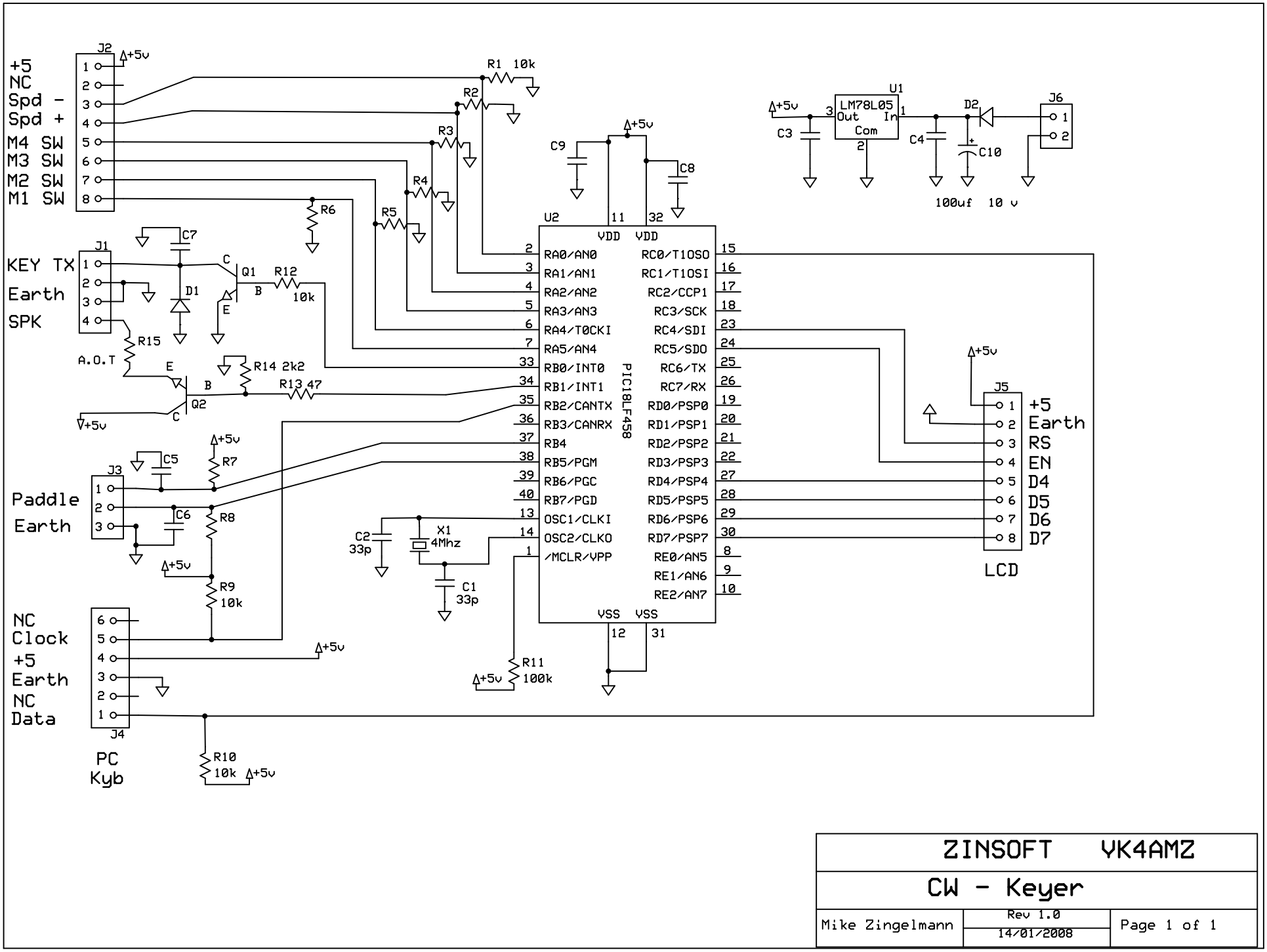

ZINSOFT YK4AMZ		
CW - Keyer		
Mike Zingelmann	Rev 1.0 14/01/2008	Page 1 of 1