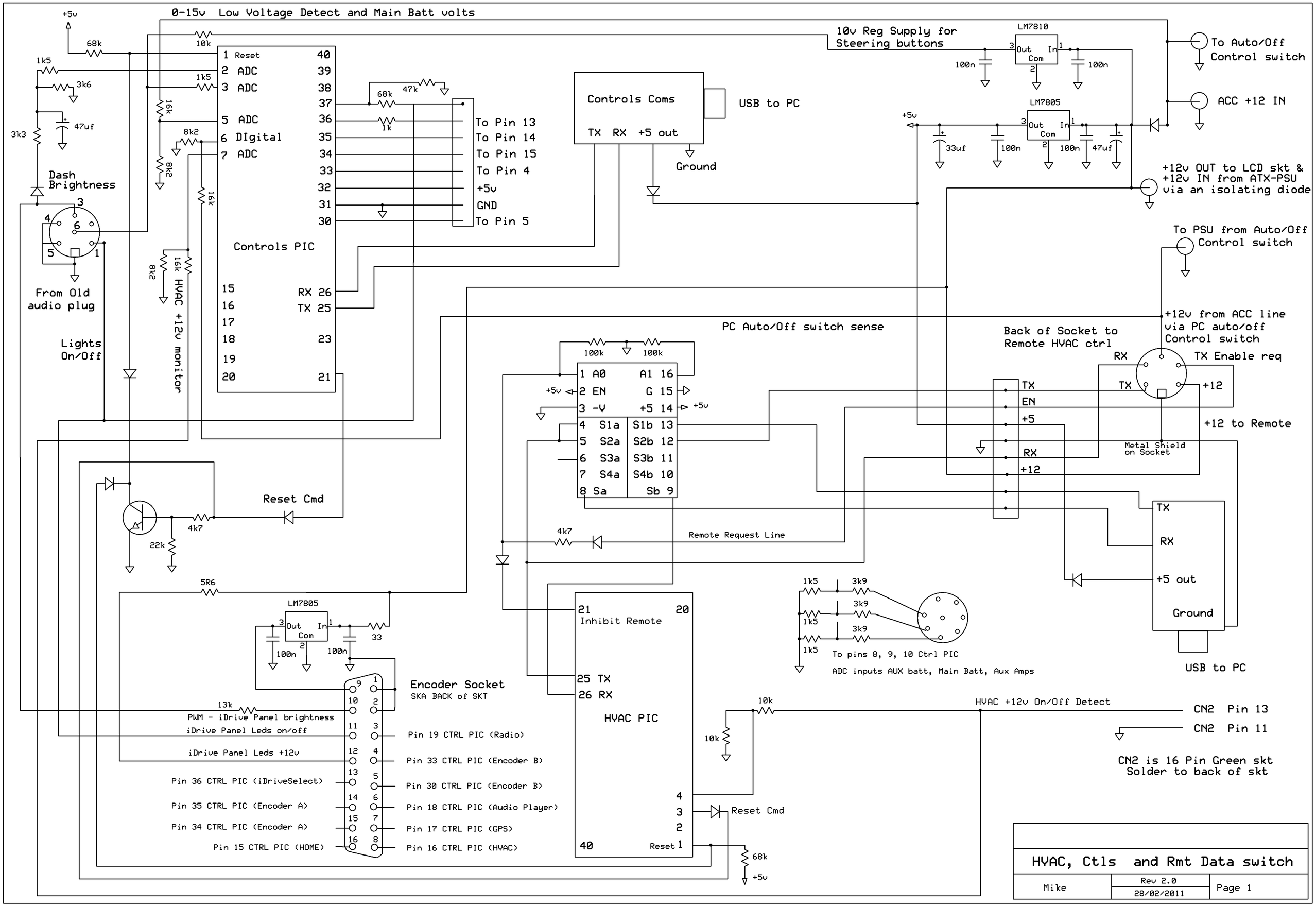
0-15v Low Voltage Detect and Main Batt volts
+5v
68k
10k
1k5
3k6
3k3
47uf
16k
8k2
Dash Brightness
From Old audio plug
Lights On/Off
HVAC +12v monitor
1 Reset
2 ADC
3 ADC
5 ADC
6 DIgital
7 ADC
Controls PIC
15
16
17
18
19
20
40
39
38
37
36
35
34
33
32
31
30
RX 26
TX 25
23
21
47k
1k
To Pin 13
To Pin 14
To Pin 15
To Pin 4
+5v
GND
To Pin 5
Controls Coms
TX RX +5 out
USB to PC
Ground
10v Reg Supply for Steering buttons
LM7810
Out In Com
100n
LM7805
33uf
47uf
To Auto/Off Control switch
ACC +12 IN
+12v OUT to LCD skt & +12v IN from ATX-PSU via an isolating diode
To PSU from Auto/Off Control switch
+12v from ACC line via PC auto/off Control switch
PC Auto/Off switch sense
100k
1 A0
2 EN
3 -V
4 S1a
5 S2a
6 S3a
7 S4a
8 Sa
A1 16
G 15
+5 14
S1b 13
S2b 12
S3b 11
S4b 10
Sb 9
Back of Socket to Remote HVAC ctrl
RX
TX Enable req
TX
+12
EN
+5
+12 to Remote
Metal Shield on Socket
Reset Cmd
4k7
22k
Remote Request Line
5R6
LM7805
33
Encoder Socket
SKA BACK of SKT
13k
PWM - iDrive Panel brightness
iDrive Panel Leds on/off
iDrive Panel Leds +12v
Pin 36 CTRL PIC (iDriveSelect)
Pin 35 CTRL PIC (Encoder A)
Pin 34 CTRL PIC (Encoder A)
Pin 15 CTRL PIC (HOME)
Pin 19 CTRL PIC (Radio)
Pin 33 CTRL PIC (Encoder B)
Pin 30 CTRL PIC (Encoder B)
Pin 18 CTRL PIC (Audio Player)
Pin 17 CTRL PIC (GPS)
Pin 16 CTRL PIC (HVAC)
21 Inhibit Remote
20
25 TX
26 RX
HVAC PIC
40
Reset 1
4
3
2
Reset Cmd
68k
+5v
1k5
3k9
To pins 8, 9, 10 Ctrl PIC
ADC inputs AUX batt, Main Batt, Aux Amps
USB to PC
10k
HVAC +12v On/Off Detect
CN2 Pin 13
CN2 Pin 11
CN2 is 16 Pin Green skt
Solder to back of skt
HVAC, Ctls and Rmt Data switch
Mike
Rev 2.0
28/02/2011
Page 1